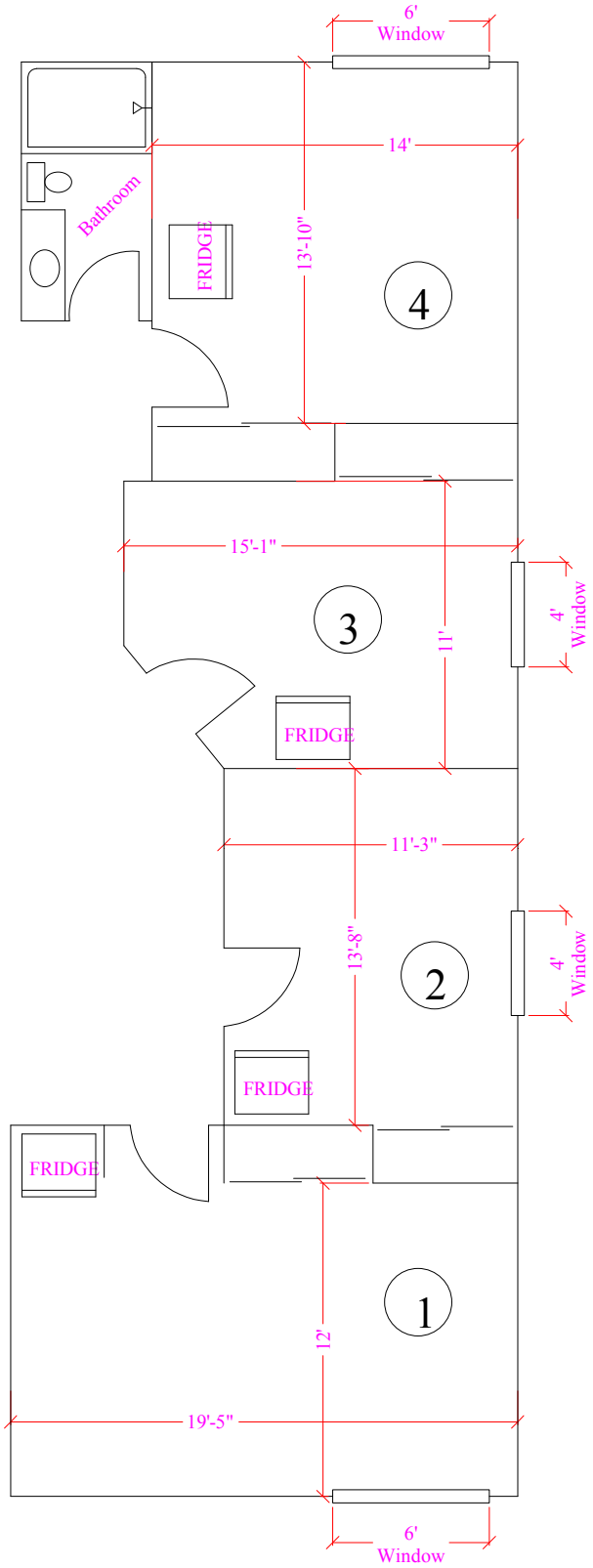
6'
Window
14'
Bathroom
FRIDGE
13'-10"
4
15'-1"
3
11'
4'
Window
FRIDGE
11'-3"
13'-8"
2
4'
Window
FRIDGE
FRIDGE
1
12'
19'-5"
6'
Window

UPPER LEVEL